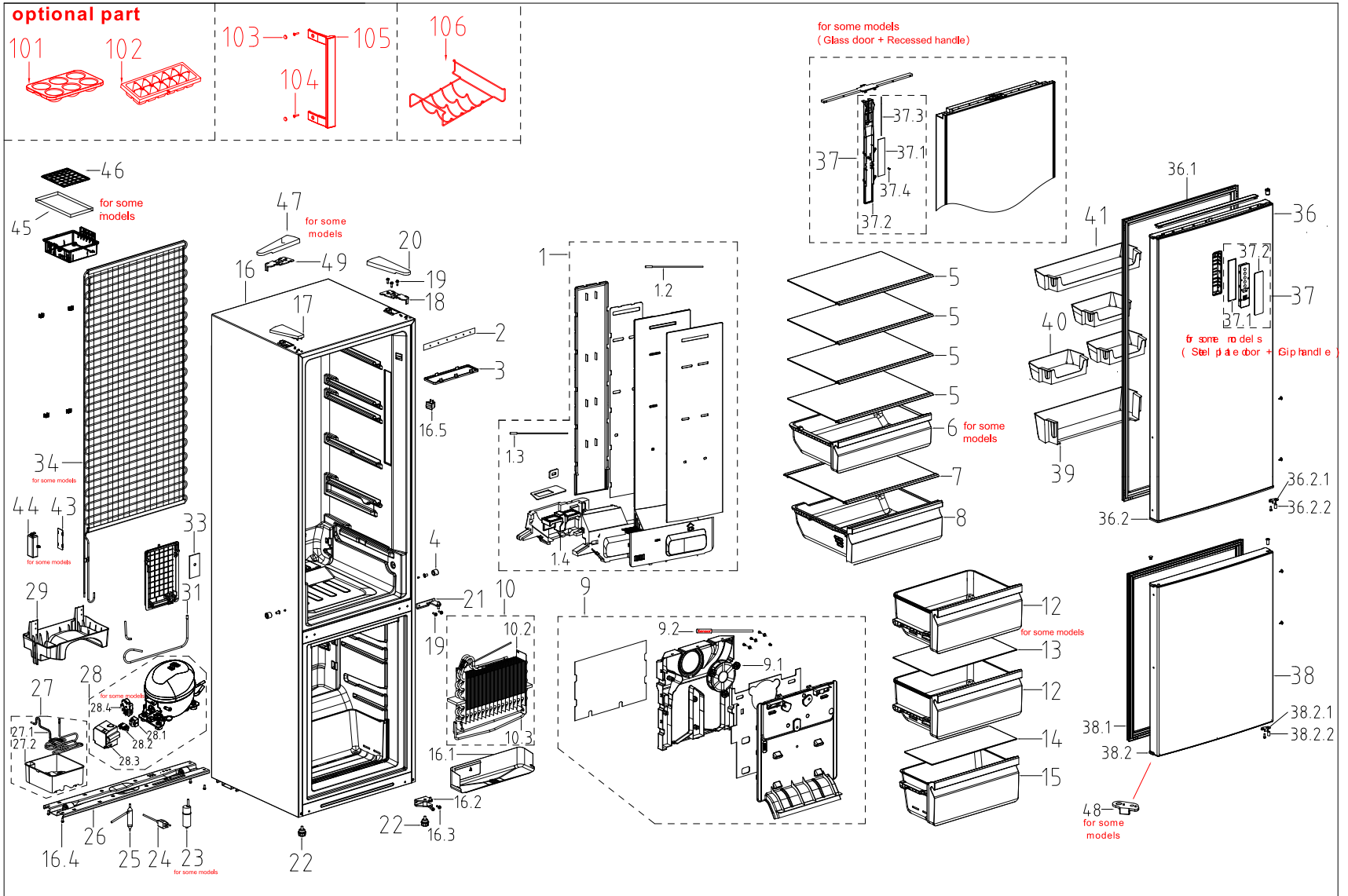
optional part
101
102
103
104
105
106
46
45
for some models
47
for some models
49
16
17
20
19
18
2
3
16.5
34
for some models
44
43
for some models
33
29
31
28
27
28.4
for some models
27.1
27.2
28.1
28.2
28.3
16.4
26
25
24
23
for some models
22
1
1.2
1.3
1.4
4
21
10
19
10.2
10.3
16.1
16.2
22
16.3
9
9.2
9.1
5
5
5
5
6
for some models
7
8
for some models
(Glass door + Recessed handle)
37.3
37
37.1
37.4
37.2
41
36.1
36
37.2
37
37.1
40
39
for some models
(Steel plate door + Gip handle)
36.2.1
36.2.2
36.2
12
for some models
13
12
14
15
38
38.1
38.2.1
38.2.2
38.2
48
for some models